7th Gen Intel® Core™ Processor
Modular-Designed Embedded System

EC500-KH Series

CM238
QM175

Fanless FC CE RoHS

Features

- Supports DDR4 SODIMM up to 32GB
- Three independent displays: 1 VGA + 1 DVI/HDMI + 1 HDMI/DP
- Rugged and Fanless Embedded System
- Rich I/O connectivity: 2 GbE, 4 COM, 4 USB 3.0, 2 USB 2.0, 1 CFast
- Supports 2 Mini PCIe and 1 M.2 slots
- Operating Temperature: -20 to 60°C, -40 to 70°C (optional)

Modular-Designed Systems | DDR4 | mSATA | Wide Temperature (70°C / -40°C) | Wide Voltage (36V / 9V)

Panel

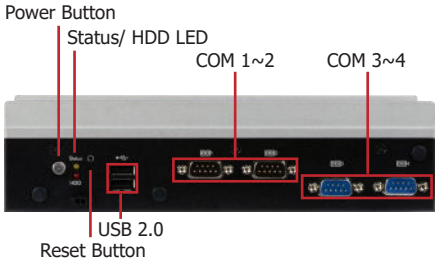

Front View

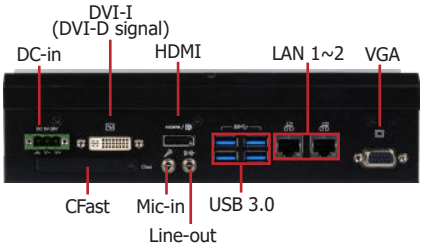

Rear View

Dimensions

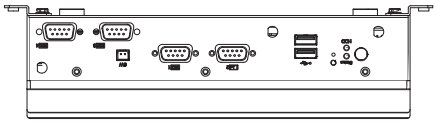

Front View

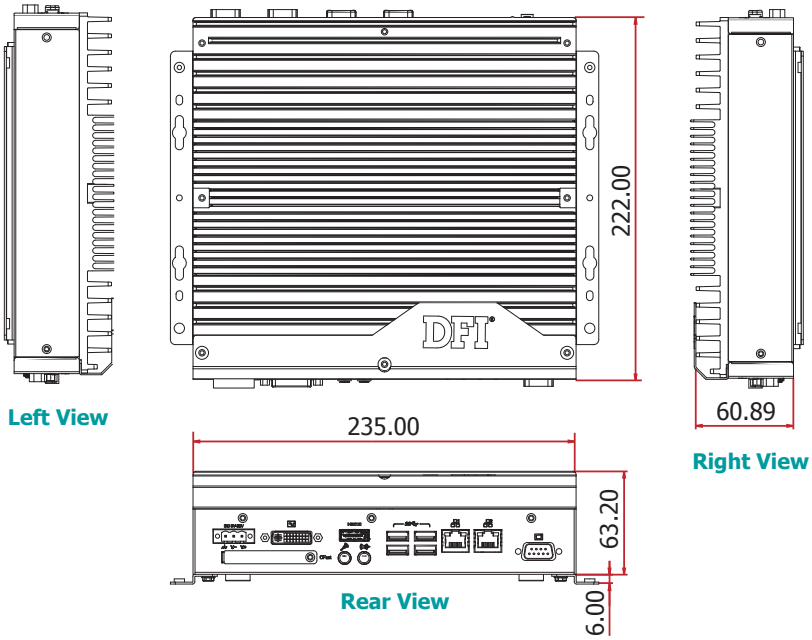

Left View | Right View | Rear View

Specifications

SYSTEM	**Processor**	7th Generation Intel® Core™ Processors, BGA 1440 Intel® Xeon® Processor E3-1535M v6, Quad Core, 8M Cache, 3.1GHz (4.2GHz), 45W Intel® Core™ i7-7820EQ Processor, Quad Core, 8M Cache, 3.0GHz (3.7GHz), 45W Intel® Core™ i5-7440EQ Processor, Quad Core, 6M Cache, 2.9GHz (3.6GHz), 45W Intel® Core™ i5-7442EQ Processor, Quad Core, 6M Cache, 2.1GHz (2.9GHz), 25W Intel® Core™ i3-7100E Processor, Dual Core, 3M Cache, 2.9GHz, 35W Intel® Core™ i3-7102E Processor, Dual Core, 3M Cache, 2.1GHz, 25W	
	Chipset	Intel® CM238 Chipset	Intel® QM175 Chipset
	Memory	Two 260-pin SODIMM up to 32GB (CM238 supports ECC)	Dual Channel DDR4 2400MHz
	BIOS	Insyde SPI 128Mbit	
GRAPHICS	**Controller**	Intel® HD Graphics	
	Feature	OpenGL up to 5.0, DirectX 11, OpenCL 2.1 HW Decode: HEVC/H.265, H.264, M/JPEG, MPEG2, VC1/WMV9, VP8 (8-bit), VP9 (10-bit) HW Encode: HEVC/H.265, M/JPEG, MPEG2, VP8	
	Display	1 x VGA 1 x HDMI/DVI (DVI-D signal) (DVI available upon request) 1 x HDMI/DP++ (DP++ available upon request)	VGA: resolution up to 1920x1200 @ 60Hz DVI: resolution up to 1920x1200 @ 60Hz HDMI: resolution up to 4096x2160 @ 24Hz DP++: resolution up to 4096x2304 @ 60Hz
	Triple Displays	VGA + HDMI/DVI (DVI-D signal) + HDMI/DP++	
STORAGE	**Internal**	1 x 2.5" SATA 3.0 Drive Bay (RAID) 1 x CFast Socket	
EXPANSION	**Interface**	1 x Full-size Mini PCIe with micro SIM socket (PCIe/USB) 1 x Full-size Mini PCIe with micro SIM socket (USB) 1 x M.2 M Key 2280 (PCIe x4) (QM175 only)	
ETHERNET	**Controller**	1 x Intel® I211AT PCIe (10/100/1000Mbps) 1 x Intel® I219LM with iAMT11.0 PCIe (10/100/1000Mbps) (only Core i7/i5 supports iAMT)	
LED	**Indicators**	1 x Power LED 1 x Status LED 1 x HDD LED	
FRONT I/O	**Serial**	2 x RS-232/422/485 (DB-9) (RS-232 with power) 2 x RS-232/422/485 (DB-9)	
	USB	2 x USB 2.0 (type A)	
	Buttons	1 x Power Button 1 x Reset Button	
	Wi-Fi Antenna	4 x Antenna Hole	
REAR I/O	**Ethernet**	2 x GbE (RJ-45)	
	USB	4 x USB 3.0 (type A)	
	Display	1 x VGA 1 x HDMI/DVI (DVI-D signal) (DVI available upon request) 1 x HDMI/DP++ (DP++ available upon request)	
	Audio	1 x Line-out 1 x Mic-in (available upon request)	
WATCHDOG TIMER	**Output & Interval**	System Reset, Programmable via Software from 1 to 255 Seconds	
SECURITY	**TPM**	TPM 2.0	
POWER	**Type**	Wide Range 9~36V	
	Connector	3-pole Terminal Block	2-pin Power Extension Switch Connector
OS SUPPORT		Windows 10 IoT Enterprise LTSB 64 Bit	Linux (available upon request)
MECHANISM	**Construction**	Metal + Aluminum	
	Mounting	Wall Mount	
	Dimensions (W x H x D)	TBD	
	Weight	TBD	
ENVIRONMENT	**Operating Temperature**	0 to 50°C (HDD) -20 to 60°C (SSD) -40 to 70°C (optional)	
	Storage Temperature	-20 to 85°C	
	Relative Humidity	5 to 95% RH (non-condensing)	
STANDARDS AND CERTIFICATIONS	**Shock**	Half sine wave 3G, 11ms, 3 shock per axis	
	Vibration	IEC68-2-64	
	Certification	CE, FCC Class A	

Wall Mounting

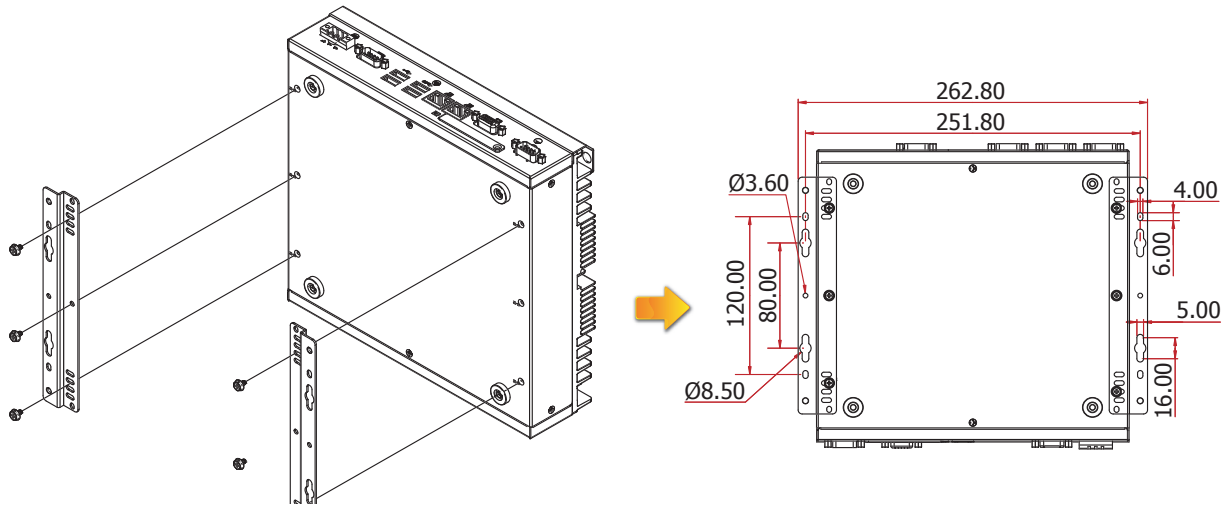

Ordering Information

Model Name	Part Number	Description
EC500-KH	750-EC5002-100G	Fanless, KH263-QM175, I3-7102E, 4 COM, 6 USB, 2 LAN, -40 to +70C . DC 9~36V input, F/G SYSTEM RoHS

Optional Items

Optional Items	Part Number	Description
SO-DIMM	785-RSOD416G	SODIMM, DDR4 Module, 16GB, RoHS
	785-RSOD48G	SODIMM, DDR4 Module, 8GB, RoHS
	785-RSOD44G	SODIMM, DDR4 Module, 4GB, RoHS
M.2 SSD	785-M2PCIE128G	M.2 PCIE x4, 128GB RoHS
	785-M2PCIE256G	M.2 PCIE x4, 256GB RoHS
	785-M2PCIE512G	M.2 PCIE x4, 512GB RoHS
mSATA SSD	85-MSATAH32G	mSATA,32GB MLC FULL SIZE RoHS
	85-MSATAH64G	mSATA,64GB MLC FULL SIZE RoHS
	85-MSATAH128G	mSATA,128GB MLC FULL SIZE RoHS
	85-MSATAH256G	mSATA,256GB MLC FULL SIZE RoHS
	85-MSATAH512G	mSATA,512GB MLC FULL SIZE RoHS
Wi-Fi/BT Kit	612-WPEQ26-000G	MINI-CARD 802.11ac/a/b/g/n+BT, 2T2R, WPEQ-261ACN(BT), SPARKLAN
Power Cord	785-PWRD	Power Cord, Standards (USA/EUR/CH/UK), 1.8m, RoHS
Power Adapter	671-110002-100G	100W, 12V, Level 6, RoHS
	671-110003-100G	120W, 19V, Level 6, RoHS
	671-112005-100G	120W, 24V, Level 6, Wide Temp, RoHS
	671-116003-000G	160W, 19V, Level 6, RoHS
Wall Mount	761-EC5410-000G	Wall Mount Kit, RoHS

Packing List

- 1 EC500-KH Series system unit
- 1 Extend power switch cable
- 1 terminal block 3pole for DC input
- 1 cable with 2 wire stripped and tinned to DC jack

DFI reserves the right to change the specifications at any time prior to the product's release. Changes thereafter will be based on the product's revision. Please contact your sales representative for the exact revision offered in your area. All product names mentioned are trademarks of their respective companies. © May 26, 2019 DFI Inc.